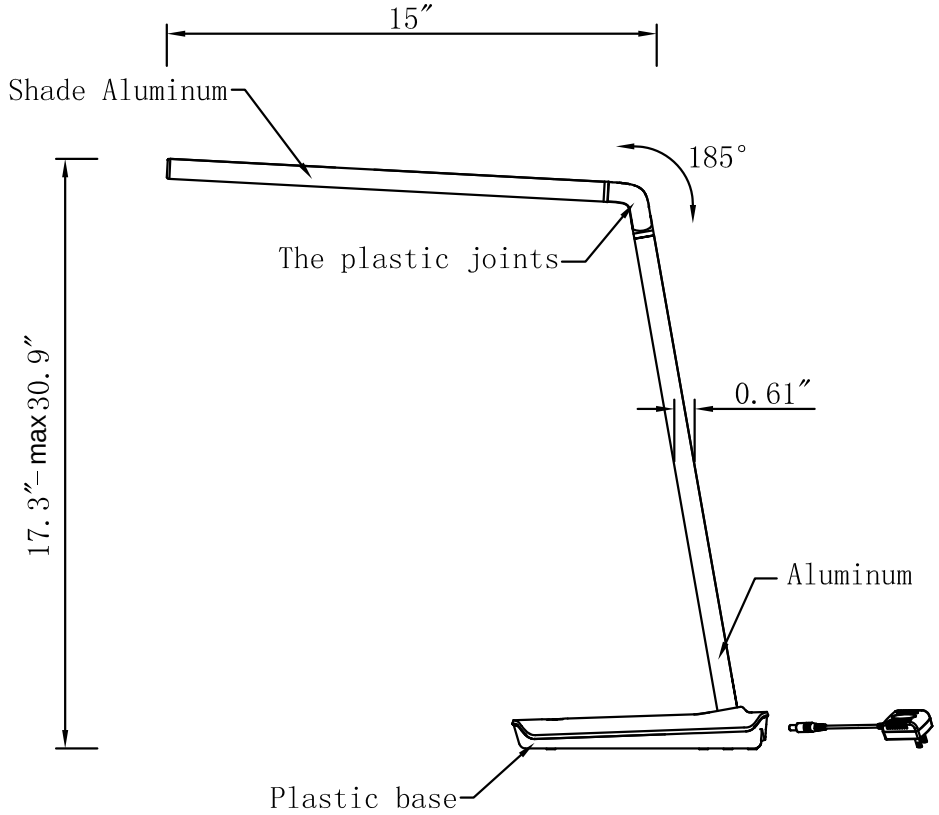

Side View

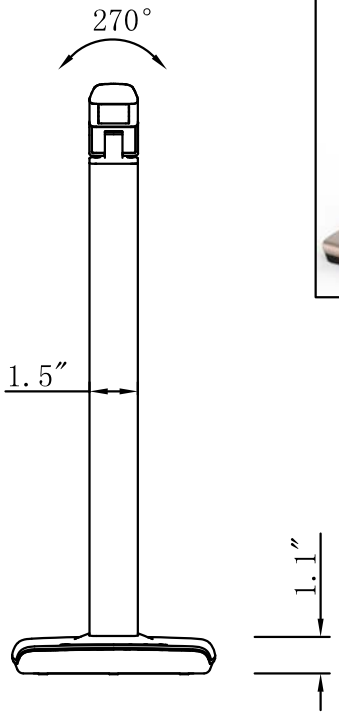

Front View

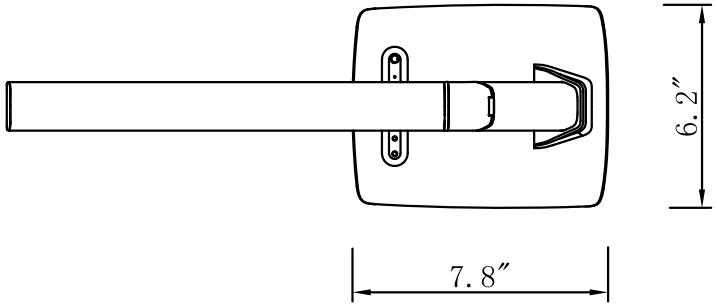

Base plan View

Finish:
Colorway 1:champagne gold
Crystal or Glass:
Cord:PVC
Type of Bulb:LED
Number of Bulb: 1PCS

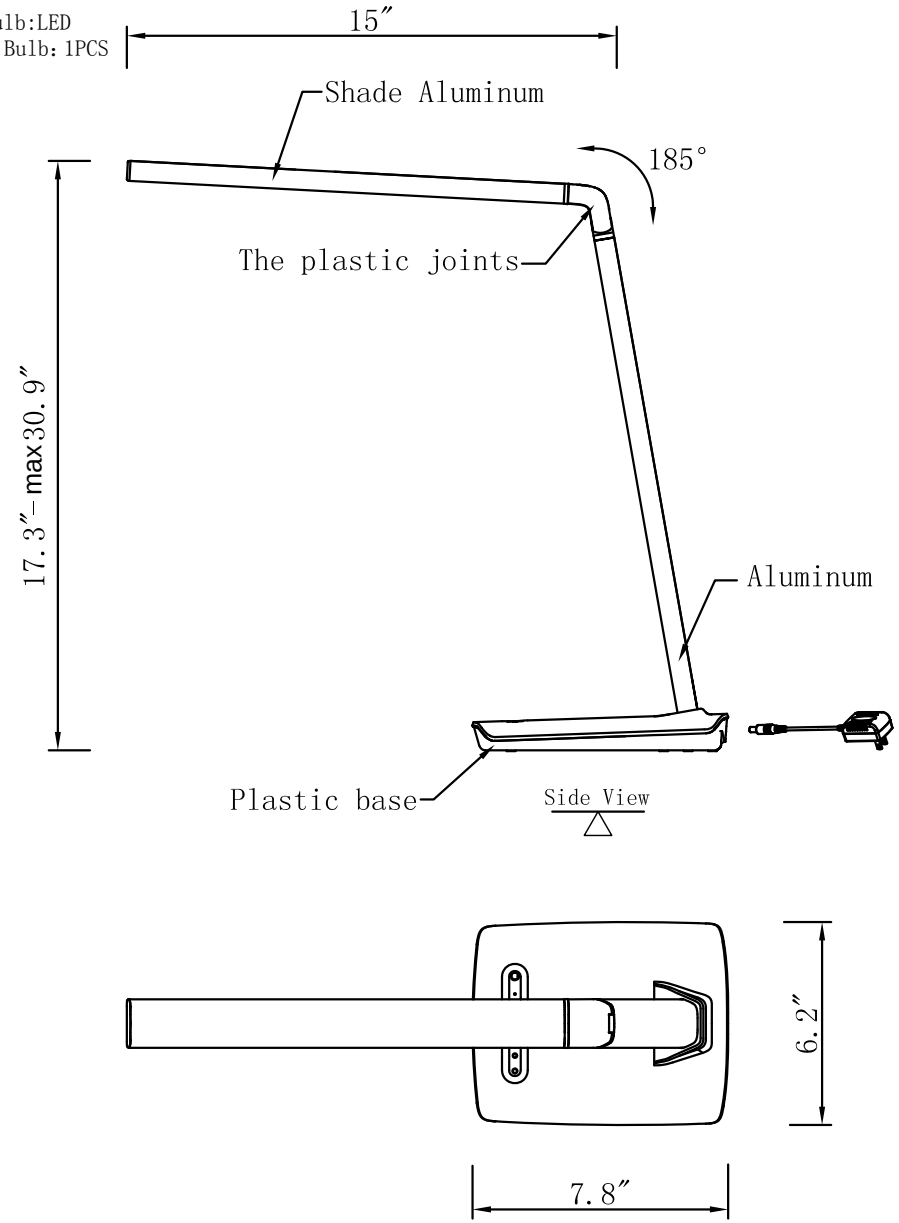

ITEM NO.	LEDDS002
DRAFTER	
DATE	

Model#	LEDDS002	Life Based on 3hrs/day(Years)	9years
Number of Tiers	1	Dimmable	YES
		Lumen	900lm
Fixture Material	Aluminum+Plastic	CRI	80
		Dry/Wet/damp	Dry
Shades Included	No	Watts	10W
		WattEquivalent	96W
Shade Material	N/A	Max Wattage	12W
		Voltage	12V DC 1.5A
Shade Color	N/A	Finish	champagne gold
Shade Shape	N/A	Hardware Finish	champagne gold
Shade Height	N/A	Hardware Material	Aluminum
Shade Width	N/A	Crystal Trim	
Shade Length	N/A	Crystal Color	NA
Switch Type	touch dimmable	UL & Ulc Standard	
Electrical Plug	Yes	Base Length (IN)	7.8″
USB	Yes	Base Width (IN)	6.2″
USB		Base Height (IN)	1.1″
Wire Included(INCH)	70.8″	Product Weight (LBS)	3.1
Wire color	black	Shipment type	small parcel
Assembly required	NO	Inner Carton Length	8.85″
Length (in.)	max18.5″	Inner Carton Width	7.48″
Width / Diameter (in.)	max6.22″	Inner Carton Height	18.11″
Height (in.)	max30.9″	Inner Carton Weight	4.35
Light Bulbs	1 PCS	Master Carton Length	27.95″
Bulb Type	SMD LED		
Color temperature	3000K	Master Carton Width	15.94″
Average Life(hours)	20000hours	Master Carton Height	19.29″
Estimated Yearly Energy cost(11¢/kWh)	1.32	Master Carton Weight	28.14